EMERGING DISPLAY TECHNOLOGIES CORPORATION	MODEL NO.	VERSION	PAGE
	32F00(CCFL TYPES) (RoHS)	1	1

OUTLINE DIMENSIONS

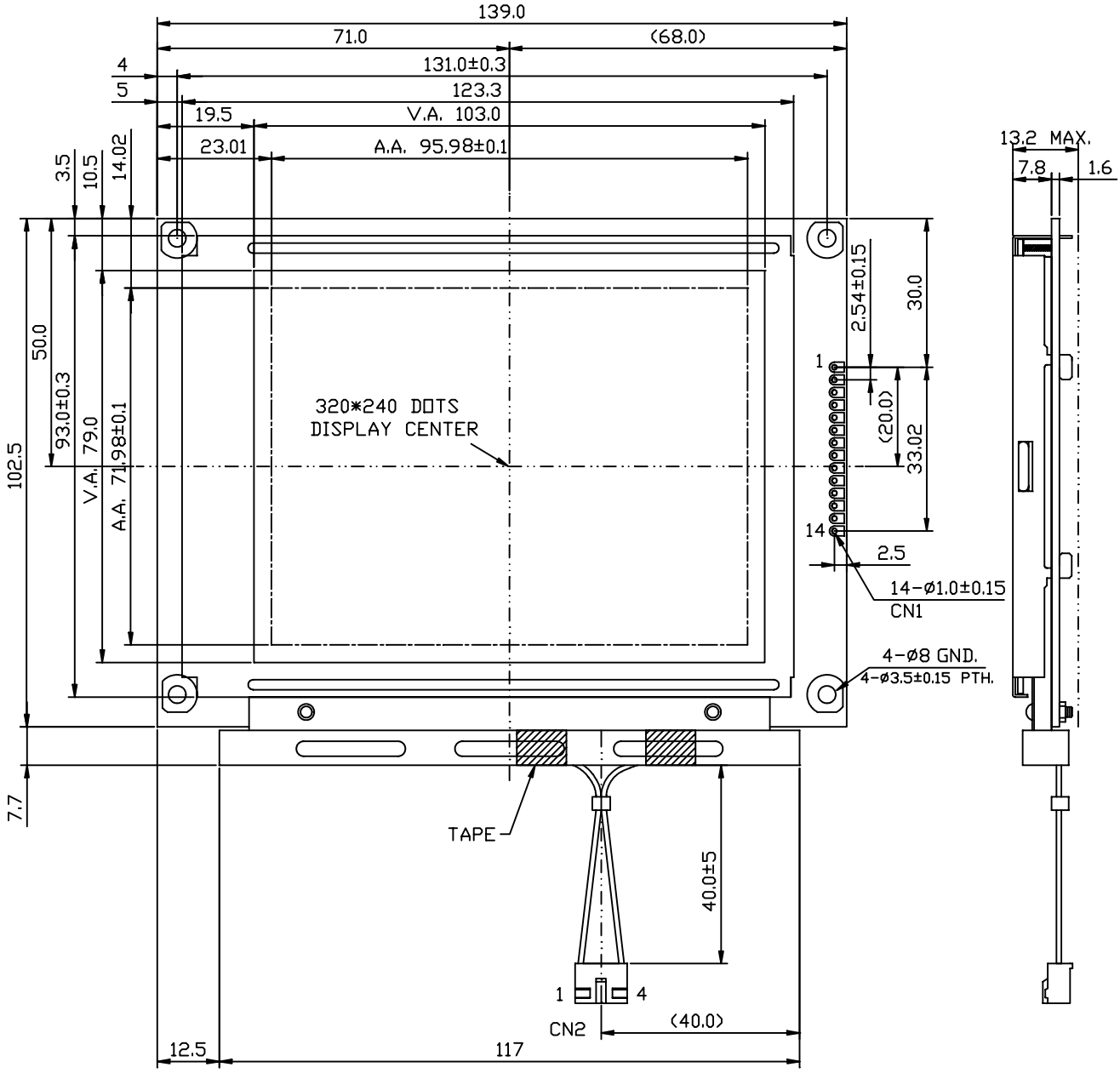

UNIT : mm
SCALE : NTS
NOT SPECIFIED TOLERANCE IS ± 0.5